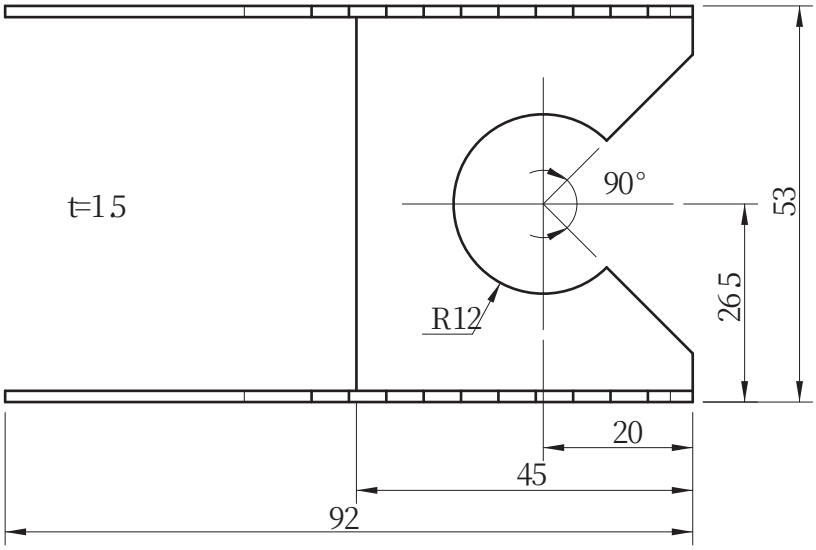
t=1.5
90°
53
26.5
R12
20
45
92

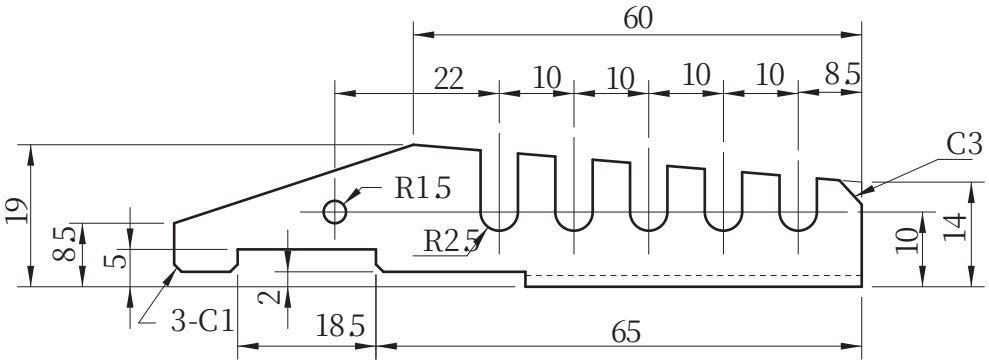
60
22
10
10
10
10
8.5
C3
R1.5
R2.5
19
8.5
5
2
3-C1
18.5
65
10
14

対面共通形状